REVISION RECORD				
REV	ECN	DESCRIPTION	DRFT	DATE

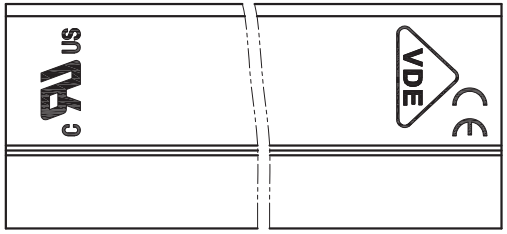

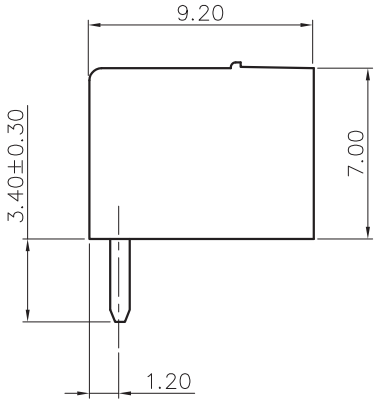

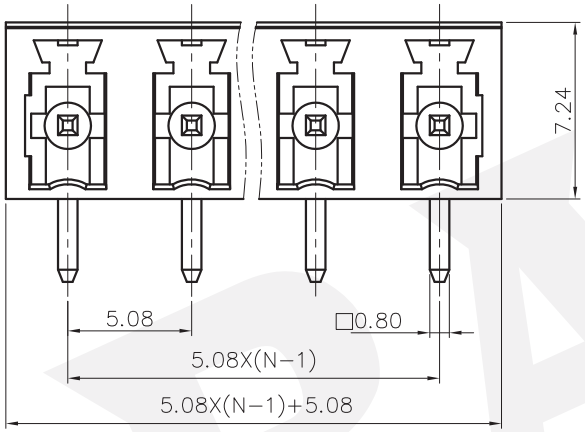

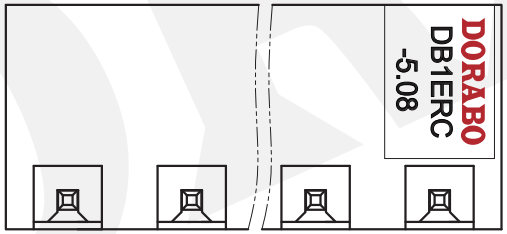

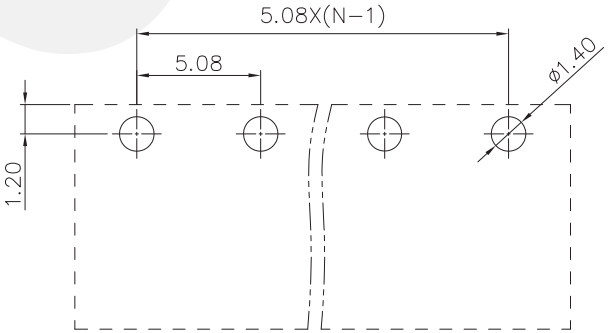

PCB LAYOUT

NOTES1:

UL Standard

1.Rated voltage/current : 300V / 8A

2.Withstanding voltage : AC1600V/1Min.

IEC Standard

1.

Pollution Degree	2
Overvoltage Category	II
Rate Impulse Voltage(KV)	4.0KV
Rate Voltage(V)	250V
Rate Current(A)	7A

NOTES2:

1.Dimension shall be interpreted per ASME Y14.5−2009

2.Pitch :5.08mm, Poles : N=02~12P

3.Operating temperature:−40°C~+105°C

4.Undimensioned tolerances:

Pitch Range In mm			Nominal Dimension Range In mm					— ⌒ ⌭
TO 6	Over 6 TO 10	Over 10 TO 24	TO 30	Over 30 TO 60	Over 60 TO 100	Over 100 TO 150	Over 150	0.1/10 ∠
±0.15	±0.25	±0.20	±0.30	±0.50	±0.70	±1.00	±1.30	±2°

5.RoHS Compliance

DB1ERC − 5.08 − XXP − 1Y − 00A (H)

- DB1ERC: (Series No.)
- 5.08: (Pitch)
- XXP: (Poles)
- 1Y: (Single Pitch)
- 00A: (Color) :1.(Grey) 2.(Blue) 3.(Black) 4.(Green) 5.(Orange) 6.(Red) 7.(Transparent) 8.(Yellow) 9.(White)
- 00A−(Standard)
- (H) (RoHS)

DETACHED LISTS				
PART NO.: /	DORABO 慈溪市地博电子有限公司 CIXI DORABO ELECTRONICS CO.,LTD			
APPD:	NAME: DB1ERC-5.08-XXP-1Y-00A(H)			
CHKD:				
DRFT:	TITLE: CUSTOMER DRAWING		REV	D0
THIRD ANGLE PROJECTION	DRAWING NO.: /		SHEET	1/1
	MM (INCH)	DO NOT SCALE DRAWING	SCALE	1:1

DORABO