| REV | ECN | DESCRIPTION | DRFT | DATE |
|---|---|---|---|---|
| | | | | |

| 未注公差/General tolerances(mm) | | | | | | | | | | | | | | |
|---|---|---|---|---|---|---|---|---|---|---|---|---|---|---|
| 0 ~ 3 | >3 ~ 6 | >6 ~ 10 | >10 ~ 18 | >18 ~ 30 | >30 ~ 50 | >50 ~ 80 | >80 ~ 120 | >120 ~ 180 | >180 ~ 250 | >250 ~ 315 | >315 ~ 400 | >400 ~ 500 | >500 | 0.1/10 |
| ±0.12 | ±0.18 | ±0.22 | ±0.26 | ±0.31 | ±0.37 | ±0.57 | ±0.80 | ±0.93 | ±1.05 | ±1.15 | ±1.60 | ±2.20 | ±2.50 | ±2' |

# PCB Layout

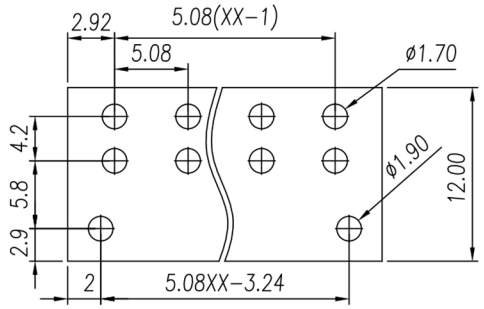


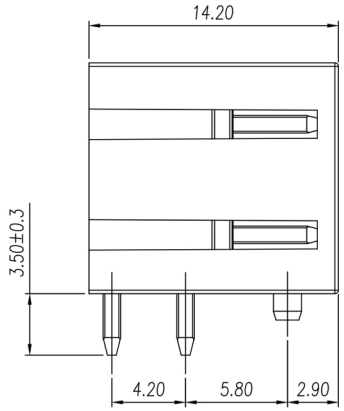


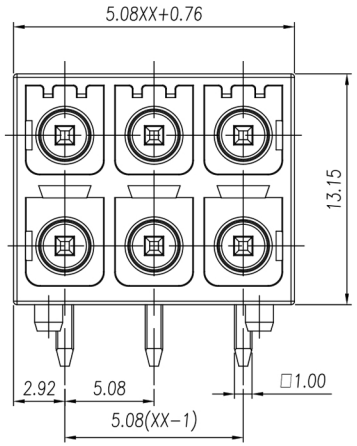


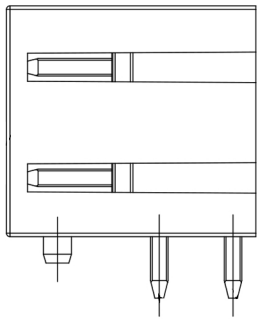

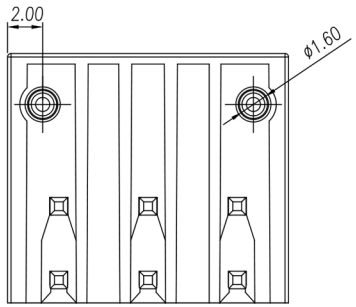


DB2ERHC - 5.08 - 2*XXP - C

(Series No.) (Pitch) (Poles)

(Color):GN:(Green), BK:(Black), BU:(Blue), RD:(Red), GY:(Gray)
OG:(Orange), WT:(White), YL:(Yellow), CR:(Clear)

| UL 标准/UL Standard: | B | C | D |
|---|---|---|---|
| 额定电压/电流/Rated Voltage(V)/Current(A) | 300/10 | / | 300/10 |
| IEC 标准/IEC Standard: | | | |
| 过压类别/Overvoltage Category/污染等级/Pollution Degree | III/3 | III/2 | II/2 |
| 额定电压/电流/Rated Voltage(V)/Current(A) | 250/8 | 400/8 | 630/8 |
| 工频耐压/Withstanding Voltage(V/1Min) | 1600V/1Min | | |
| 线径范围(硬线和软线)/Wire Range(rigid and flexible)($mm^2$/AWG) | 0.2~1.5/24~16 | | |
| 间距/Pitch(mm)/线数范围/Poles | 5.08/N=2*02~2*18P | | |
| 剥线长度/Stripping length(mm) | 9~10 | | |
| 使用温度范围/Operating temperature(°C) | -40~+105 | | |
| 符合RoHS环保要求/Conform to RoHS | Yes | | |

| ITEM | NAME OF PART | MATERIAL | NOTES |
|---|---|---|---|
| 5 | Spring | Stainless steel | |
| 4 | Pin header | Copper alloy | Sn Plated |
| 3 | Button | POM | UL94HB |
| 2 | Cover | PA66 | UL94V-0 |
| 1 | Housing | PA66 | UL94V-0 |

MAT NO.: /

STATUS: /

APPD: Steven Lu 2026.03.09

CHKD: Jting Chen 2026.03.09

DRFT: Tom Mao 2026.03.09

SIZE: A4 mm (inch)

DORABO 宁波地博电气有限公司 NINGBO DORABO ELECTRIC CO., LTD

NAME: DB2ERHC-5.08-2*XXP-C

DRAWING NO.: / REV: M1

TYPE: CUSTOMER_DRAWING SCALE: 1:1 SHEET 1/1